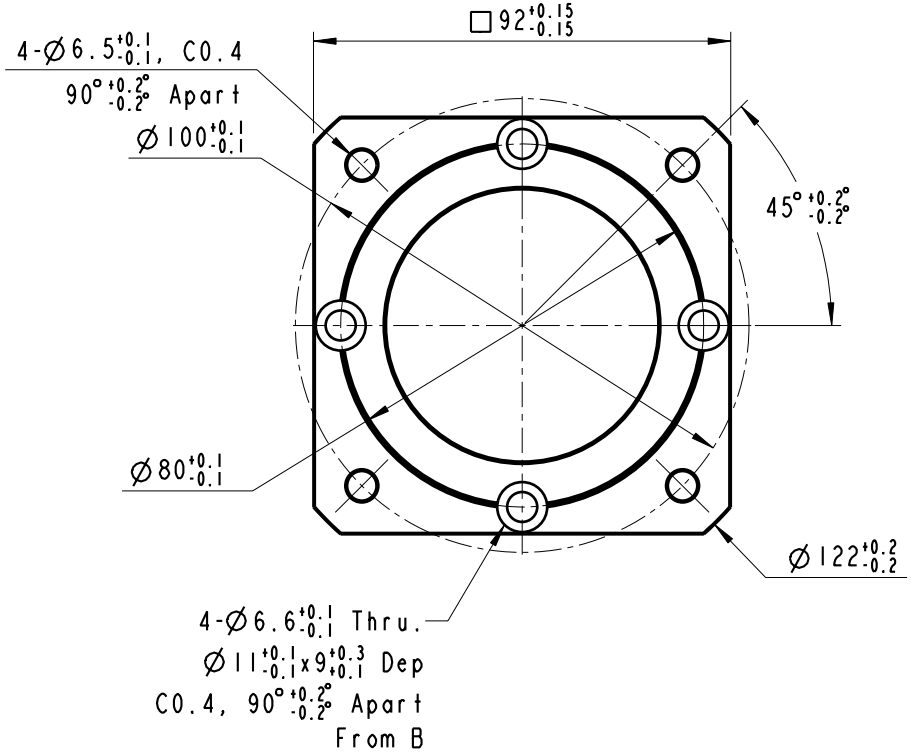

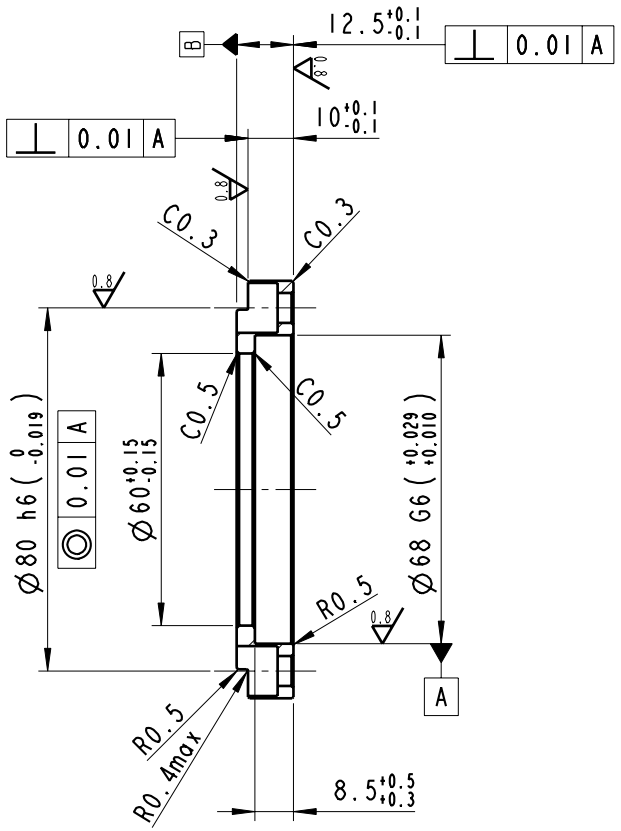

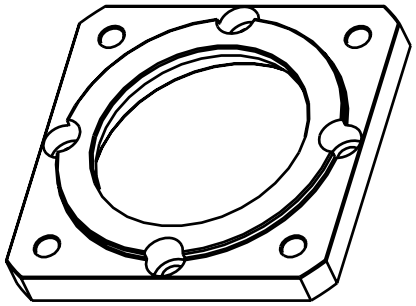

SCALE 1:2

Hardness 60±5 HRB
Mass= 0.134 Kg
Fix Plate For AE090-NEMA DT90/PX90

	AL6061		PF130004	Front Plates
NO	Material	Qty	Part No	Part Name

Dwg Name	FP-W92-D80	Page	1 / 1
Dwg No	PF130004.00	Size	A4
Appover		Scale	3:5
Checker		Date	03-Feb-07
Designer	Jacky Hsueh	Drawer	Jacky Hsueh

APEX DYNAMICS, INC.

APEX DYNAMICS, INC.

Rev No	Revision Content	Revisier	Date