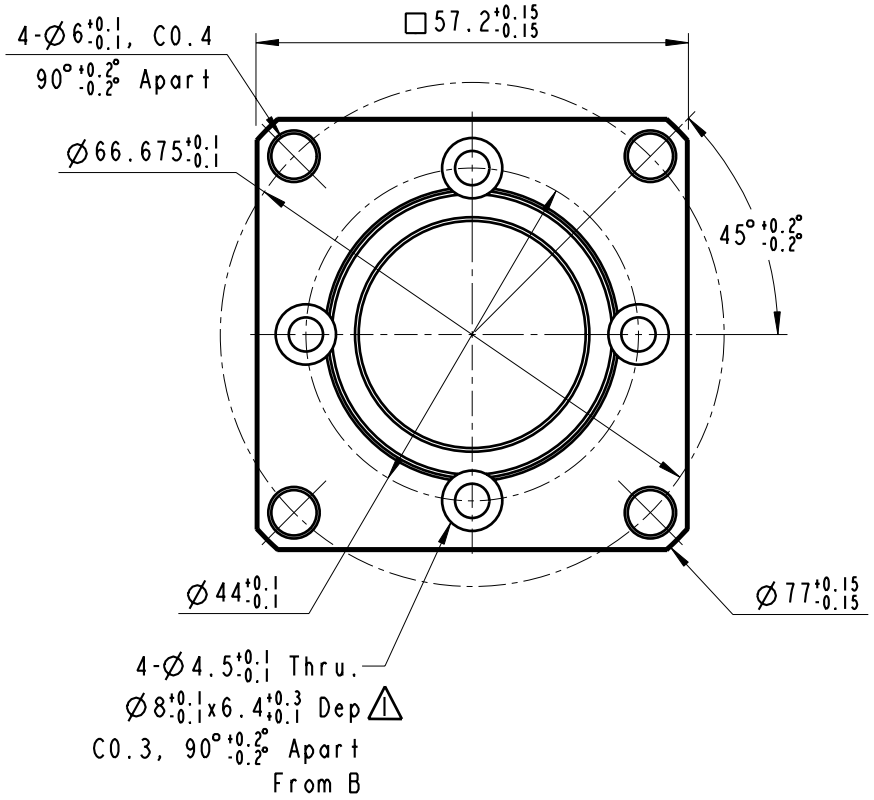

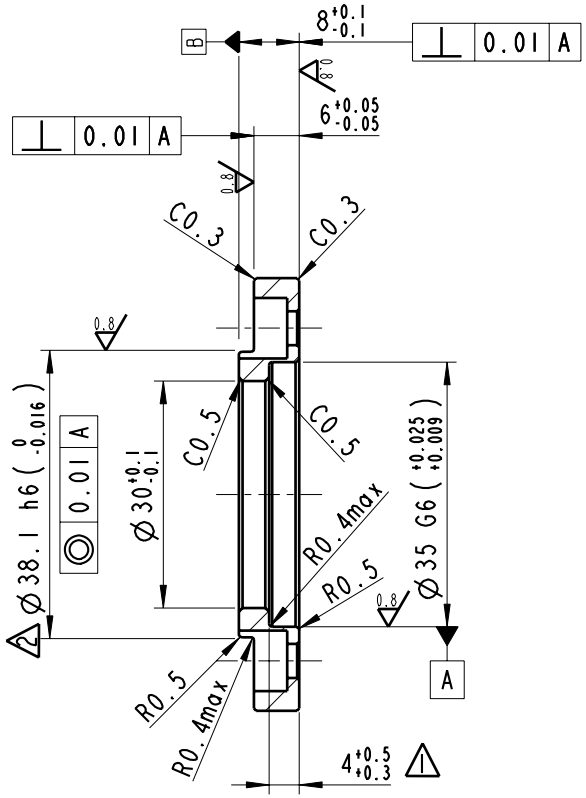

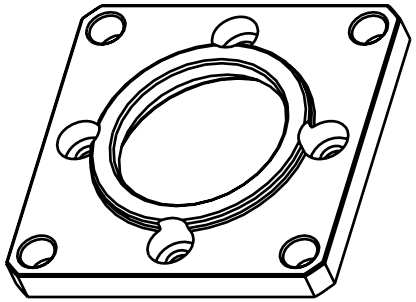

SCALE 4:5

Hardness 60±5 HRB
Mass= 0.036 Kg
Fix Plate For AE050-NEMA 23

NO	Material	Qty	Part No	Part Name
	AL6061		PF110002	Front Plates

APEX DYNAMICS, INC.					Dwg Name	FP-W57.2-D38.15	Page	1 / 1
					Dwg No	PF110002.00	Size	A4
	2	Ø38.15->Ø38.1	Cindy	25-May-06	Appover		Scale	1:1
	1	公差變更, 6Dep->6.4Dep			Checker		Date	21-Oct-05
APEX DYNAMICS, INC.	Rev No	Revision Content	Revisier	Date	Designer	Jacky Hsueh	Drawer	Jacky Hsueh